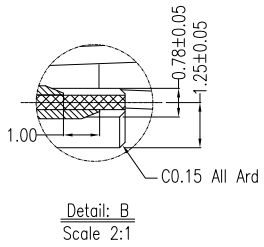

Detail: B
Scale 2:1

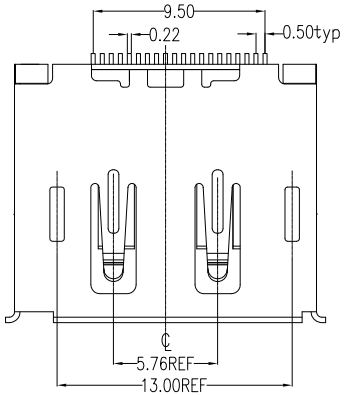

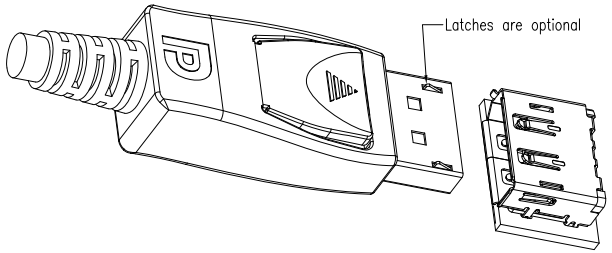

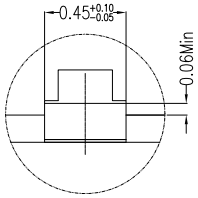

Detail: C
Scale 10:1

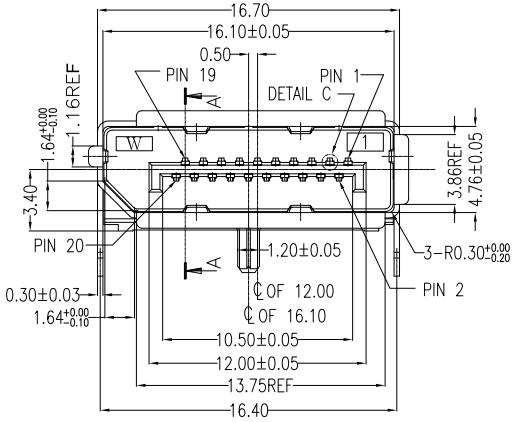

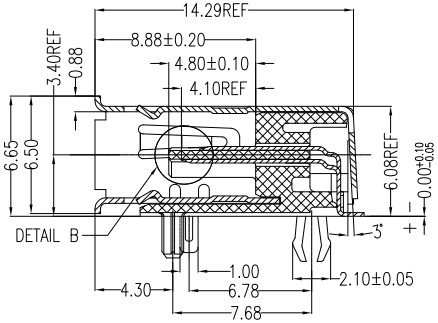

SECT A-A

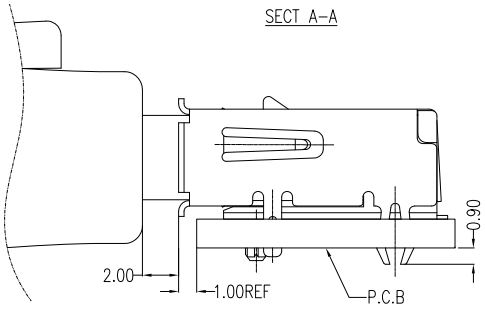

Fully mated condition

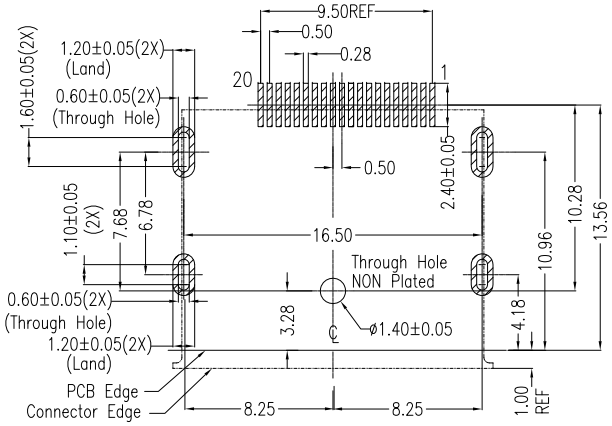

P.C.B Layout(T=1.60mm)
COMPONENT SIDE

No.	Signal Type	No.	Signal Type
1	In	11	GND
2	GND	12	In
3	In	13	CONFIG(see note 1)
4	In	14	CONFIG(see note 1)
5	GND	15	I/O
6	In	16	GND
7	In	17	I/O
8	GND	18	Out
9	In	19	RTN
10	In	20	Power Out(see note 2)

NOTES:

1. Material:
   Housing: LCP+50%G.F, UL94V-0 Rated.
   Color: Black.
   Contact: Phosphor Bronze.
   Plating: Gold Plating over Nickel on Contact Area.
   Tin Plating on Solder Tail.
   Shell: Brass.
   Plating: Nickel Plating.
2. Mechanical:
   Insertion Force: 4.5Kgf Max.
   Withdrawal Force: 1.0~4.0Kgf.
3. Electrical Specification:
   Operation Voltage: 40VAC Max.
   Current Rating: 0.5 Ampere per Contact.
   Contact Resistance: 30mΩ Max.
   Insulation Resistance: 100MΩ Min.
   Dielectric Withstanding Voltage: 500V AC Min.
4. Environmental:
   Operating Temperature: -20°C to +85°C

Part Number:

CDPC-R20RS40-E3

- DisplayPort Series
- R: Receptacle Type
- 20: 20Pins
- R: Right Angle
- Product Number:
  - E3: Without Flange
  - 0: Black Color
  - 4: 30u" Plating
  - S: SMT Type

REV	DATE	DESCRIPTION
A	07/12/10	RELEASED FOR PRODUCTION

UNLESS OTHERWISE SPECIFIED DIMENSIONS ARE IN MM
TOLERANCES ARE:
DECIMALS .X ± .38 .XX ± .25 .XXX ± .20
ANGLES ± 3°

DO NOT SCALE DRAWING

CAD GENERATED DRAWING, DO NOT MANUALLY UPDATE

APPROVALS		DATE
DRAWN	Chris	07/12/10
CHECKED	Cindy	07/12/10
APPV	Jason	07/12/10

SHEET 1 OF 1 SCALE NONE

凱聯科技股份有限公司
Conn-Link Technology Inc.

DESCRIPTION: DisplayPort Connector 20P, Receptacle SMT Type, Without Flange

DWG. NO. CDPC-R20-E03 REV. A