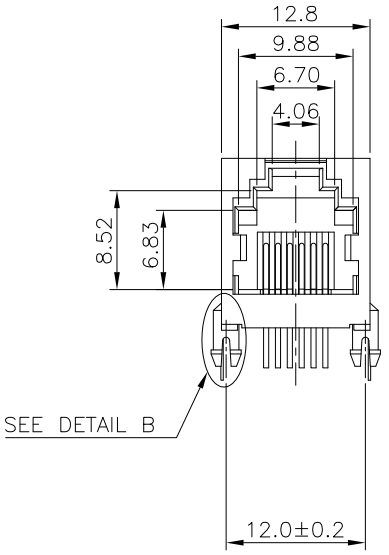

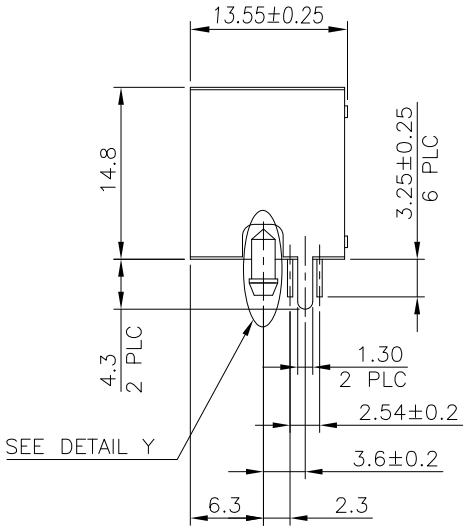

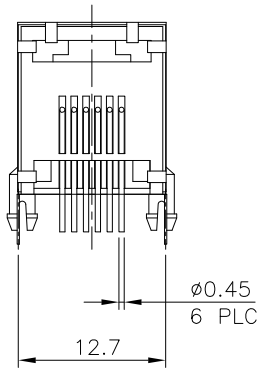

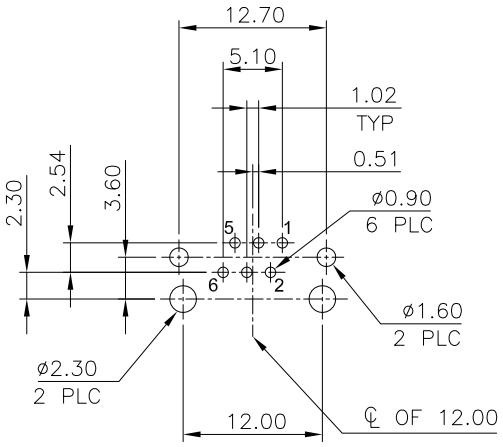

RECOMMENDED PCB LAYOUT
PCB THICKNESS: 1.6mm
TOLERANCE: ±0.05mm (TOP VIEW)

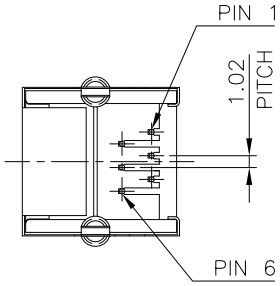

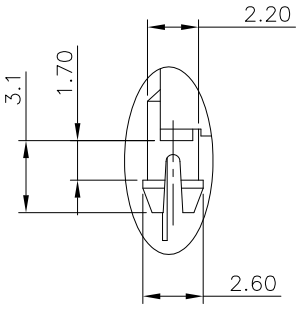

DETAIL Z
SCALE 2:1

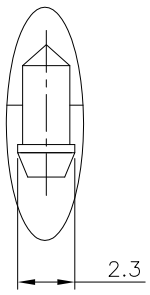

DETAIL Y
SCALE 2:1

NOTES:

1. Material:
   Housing: PBT With Glass Fiber, UL 94V-0 Rated.
   Color: Black.
   Contact: Phosphor Bronze.
   Plating: Gold Plating over Nickel on Contact Area.
   Tin Plating over Nickel on Solder Tail.
   Shield: Brass.
   Plating: Nickel Plating.
2. Mechanical:
   Durability: 750 Cycles.
3. Electrical Specification:
   Operation Voltage: 125VAC Rms.
   Current Rating: 1.5 Ampere.
   Contact Resistance: 30mΩ Max.
   Insulation Resistance: 500MΩ Min at 500VDC.
   Dielectric Withstanding Voltage: 1000 VAC Rms 60Hz, 1Min.
4. Environmental:
   Storage Temperature: -40°C to +85°C
   Operating Temperature: -20°C to +75°C
   Mates With Modular Plug Conforming To FCC Part 68, Subpart F.

Part Number:

CRJM-166RDC0-YS0

- RJ Module Jack
- 1: 1Port
- 66: 6P6C
- R: Right Angle (Side Entry)
- D: DIP Type
- Blank: Without Transformer
- LED Color Options:
  - 0: Without LED
  - S: With Shielding, Without Springs
  - Y: Body=13.55mm, Post=12.00mm
- 0: Black Color
- Contact Plating:
  - C: 6u" Gold Plating

REV	DATE	DESCRIPTION
A	03/09/17	RELEASED FOR PRODUCTION

UNLESS OTHERWISE SPECIFIED DIMENSIONS ARE IN MM
TOLERANCES ARE:
DECIMALS: .X ± .38, .XX ± .25, .XXX ± .20
ANGLES: ± 3°

DO NOT SCALE DRAWING

CAD GENERATED DRAWING, DO NOT MANUALLY UPDATE

APPROVALS		DATE
DRAWN	Chris	03/09/17
CHECKED	Cindy	03/09/17
APPV	Jason	03/09/17

SHEET 1 OF 1 | SCALE NONE

凱聯科技股份有限公司
Conn-Link Technology Inc.

DESCRIPTION: RJ11 Connector, 6P6C, Right Angle(Side Entry), DIP Without LED, With Shielding, Without Springs, Body=13.55mm

DWG. NO. CRJM-166-YS0 | REV. A